BEGIN DATE: 2015.03.12
UPDATA: 2016.12.01

GENERAL SPECIFICATION OF D85MG DIGITAL MICRO SERVO

1.TECHNICAL VALUE

			REFFERENCE ONLY
CONTROL SYSTEM	:+PULSE WIDTH CONTROL 1500usec NEUTRAL		
OPERATING VOLTAGE RANGE	:4.8V TO 6.0V		
OPERATING TEMPERATURE RANGE	:−20° TO +60°(−4°F TO +140°F)		
TEST VOLTAGE	:AT 4.8V	AT 6.0V	AT 7.4V
OPERATING SPEED	:0.18sec/60°	0.14sec/60°	0.12sec/60°
STALL TORQUE	:3.6kg.cm(50.27oz.in)	4.3kg.cm(60.04oz.in)	5.3kg.cm(74.00oz.in)
STANDING TORQUE	:−	−	
IDLE CURRENT	:30mA AT STOPPED	30mA AT STOPPED	30mA AT STOPPED
RUNNING CURRENT	:230mA/60°	290mA/60°	350mA/60°
STALL CURRENT	:1,200mA	1,400mA	1,700mA
DEAD BAND WIDTH	:2usec	2usec	2usec
OPERATING TRAVEL	:40°/ONE SIDE PULSE TRAVELING 400usec		
DIRECTION	:CLOCK WISE/PULSE TRAVELING 1500 TO 1900usec		
MOTOR TYPE	:CORED METAL BRUSH		
POTENTIOMETER TYPE	:1M CYCLE LONG LIFE/INDIRECT DRIVE		
AMPLIFIER TYPE	:DIGITAL AMPLIFIER & MOSFET DRIVER		
DIMENSIONS	:29x13x30mm(1.14x0.51x1.18in)		
WEIGHT	:24g		
BALL BEARING	:SINGLE/MR106		
GEAR MATERIAL	:5 METALS		
HORN GEAR SPLINE	:24 SEGMENTS/ø5.76		
SPLINED HORNS	:MICRO/M−I, M−O, M−X		
CONNECTOR WIRE LENGTH	:250mm(9.84in)		
CONNECTOR WIRE STRAND COUNTER	:20EA		
CONNECTOR WIRE GAUGE	:28AWG		

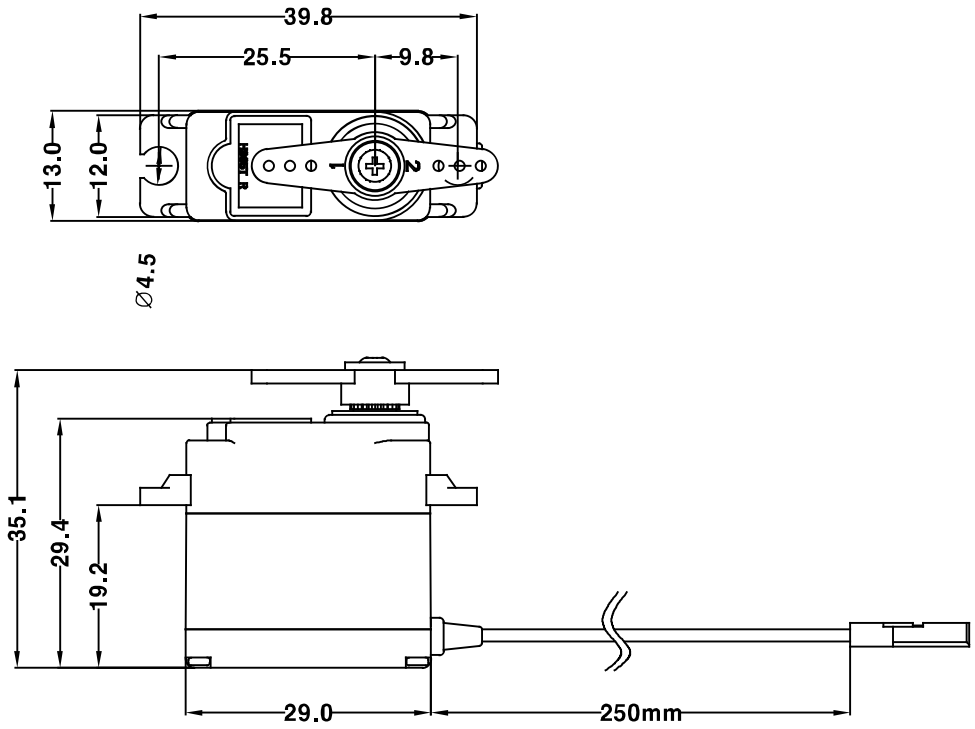

(UNIT: mm)

2.FEATURES

3.APPLICATIONS

FOR SMALL MODELS